卷册检索号 SEARCH NO. OF THE VOLUME
MLHVDC-LCS-ECI-DD-CS-0402 30-B003701S-T0402

图纸文件目录（首页）

CATALOG OF DRAWING DOCUMENTS (HEAD PAGE)

拉合尔±660kV换流站 工程 施工图 阶段
±660kV Lahore Converter Station PROJECT Detail Design DESIGN STAGE

结构 专业 第 04 卷 第 02 册
Structure SPECIALITY VOLUME BOOK

卷册名称 备用换流变基础图（第一次修改）
Volume name layout of foundation for Spare Converter Transformer(First modification)

批 准 APPROVED BY	张[illegible]
审 核 REVIEWED BY	
设计/勘测 DESIGNED BY/ SURVEYED BY	沈[illegible]
图 纸 3 张 DRAWING NOS.	打印件 1 本 PRINTED COPIES NOS.

序号 No.	图 号 DRAWING NO.	文 件 名 称 DOCUMENT TITLE	版本 EDITION	张 NOS.	本 NOS.	备注 REMARKS
1	30-B003701S-T0402-001	备用换流变基础布置图 layout of foundation for Spare Converter Transformer	B	1		
2	30-B003701S-T0402-002	YY备用换流变基础图 layout of foundation for YY Spare Converter Transformer	B	1		
3	30-B003701S-T0402-003	YD备用换流变基础图 layout of foundation for YD Spare Converter Transformer	B	1		
4	30-B003701S-T0402-004	备用换流变支墩图 layout of abanurus for Spare Converter Transformer	A	1		

注：在本次卷册修改中，序号001、002、003图为本次升版图纸，序号004图为新增图纸。

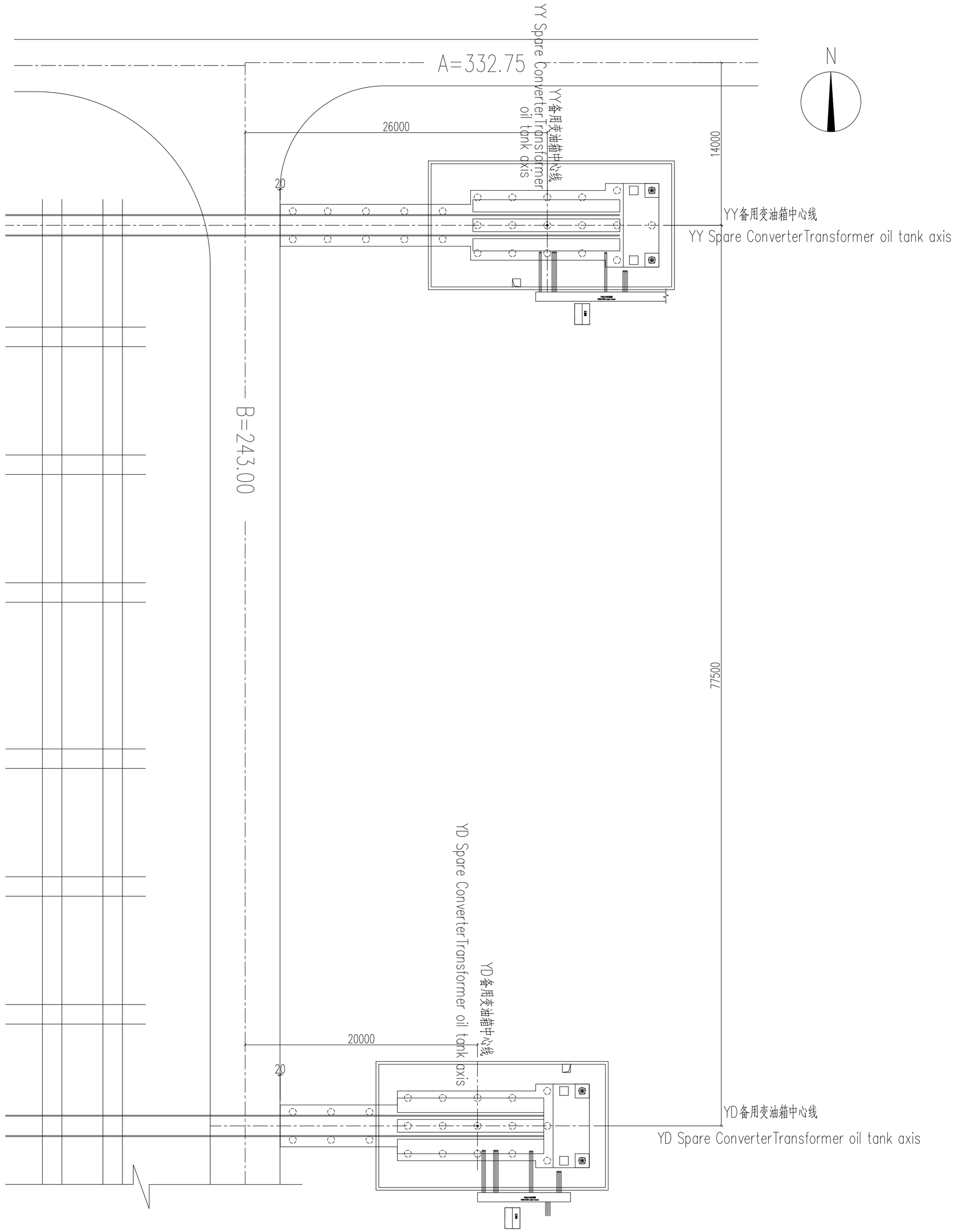

说明：

1、换流变广场场地±0.000相当于绝对标高193.60(EGM2008高程系统)。如无特别说明，本工程标高均采用相对标高。

2、备用换流变基础采用桩筏板基础形式，桩为Ø600的机械成孔灌注桩。

Specification :

1. The Converter Transformer square site level of ±0.000 is equal to the absolute elevation of193.60 (geodestic datum system EGM2008) If not specified,the elevations of the project are adopt to the relative elevation.
2. The foundation of this project adopts the form of raft foundation and filling pile under column. The pile is a bored cast-in-place pile with a diameter of 600.

Reference Drawings

Drwg. No.	Title

Revisions

	Name	Date	Notes

巴基斯坦默蒂亚里—拉合尔±660kV直流输电工程

±660kV HVDC Project from Matiari to Lahore in Pakistan

NATIONAL TRANSMISSION & DESPATCH COMPANY (NTDC) LIMITED PAKISTAN

CONTRACTOR 国家电网 STATE GRID 中国电力技术装备有限公司 CHINA ELECTRIC POWER EQUIPMENT AND TECHNOLOGY CO.,LTD.

SUBCONTRACTOR East China Electric Power Design Institute Co.,Ltd.

拉合尔±660kV换流站

±660kV Lahore Converter Station

设计阶段 PHASE: 施工图 Detail Design

M L H V D C - L C S - E C I - D D - C S - 0 4 0 2 - 0 0 1 B

	姓名 Name	日期 Date
设计 Designed	魏伟	2019.11.25
校核 Checked	刘磊	2019.11.25
审核 Reviewed	姜素婧	2019.11.25
批准 Approved	韩军	2019.11.25
比例 Scale	1:200	图号 DWG NO.

备用换流变基础布置图

layout of foundation for Spare Converter Transformer

30-B003701S-T0402-001

版本 REV. B

专业 Speciality	会签 Sign	日期 Date
水工	甲志	2019.11.25
电气一次	李耀	2019.11.25

594X841

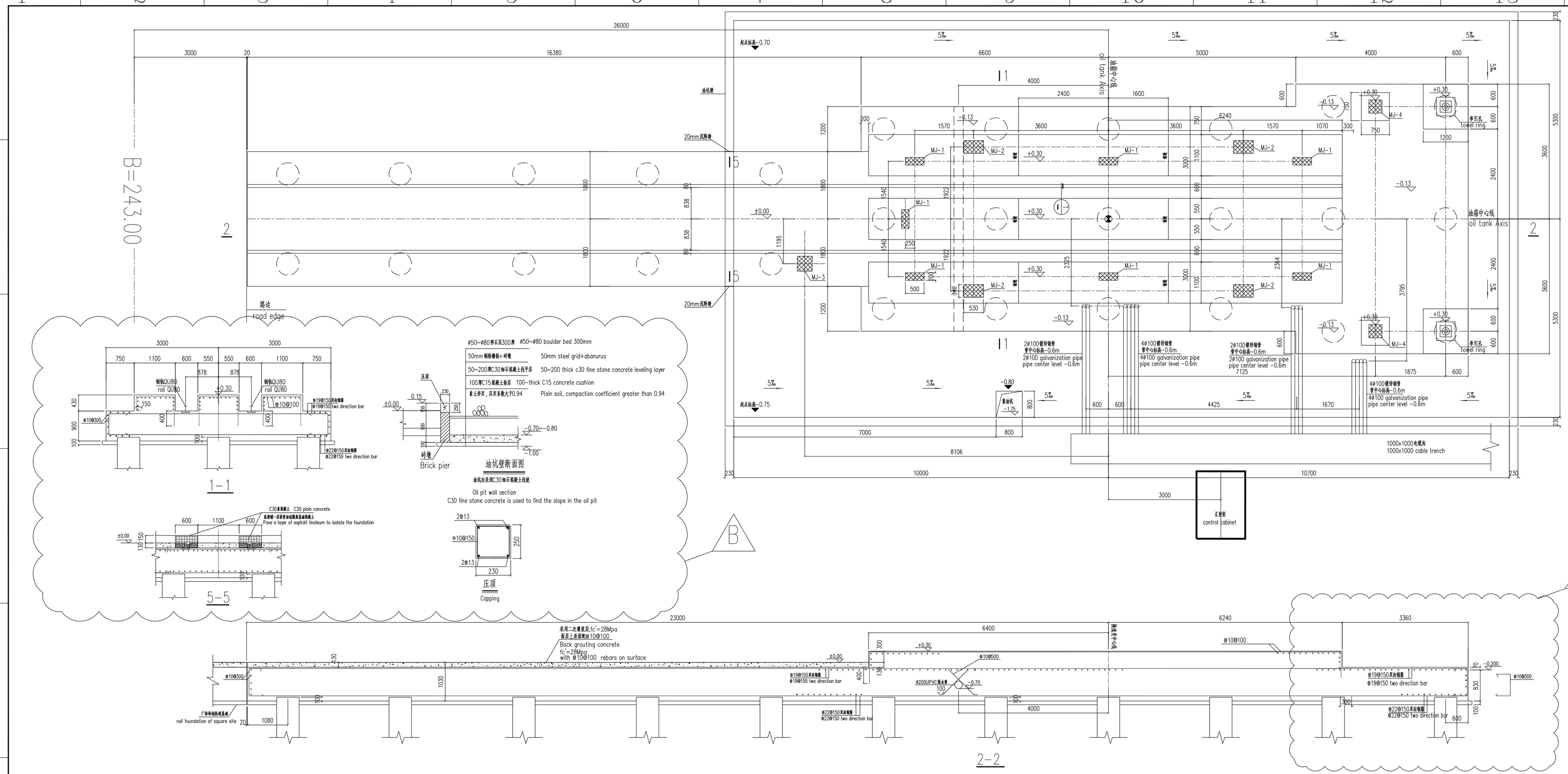

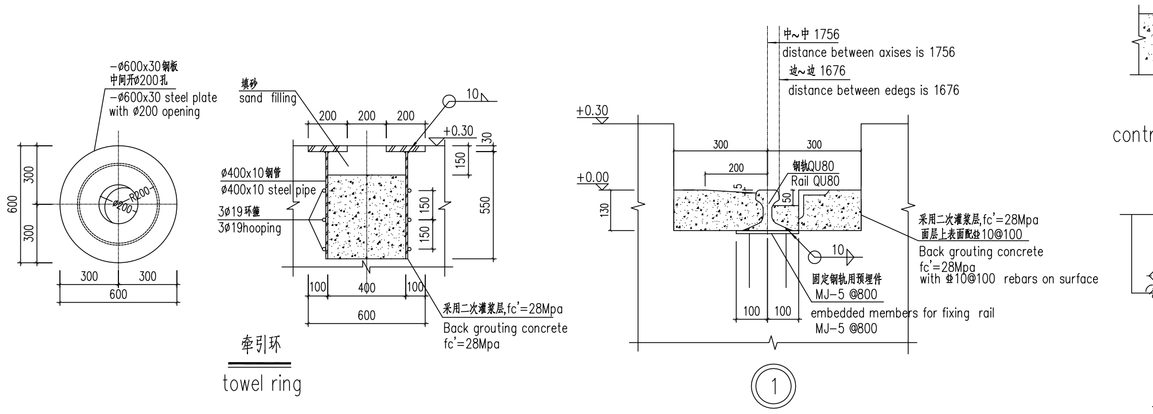

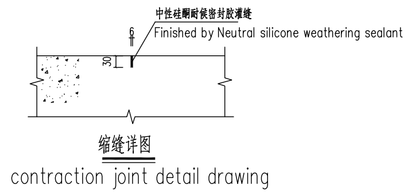

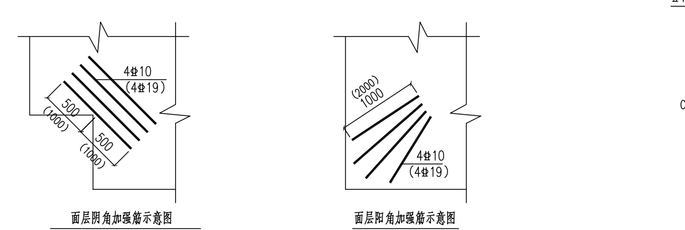

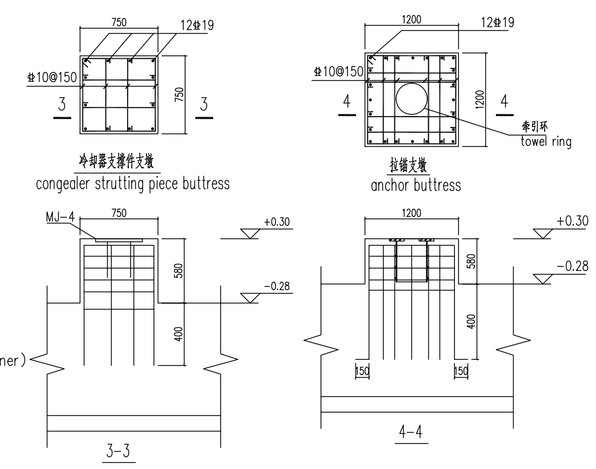

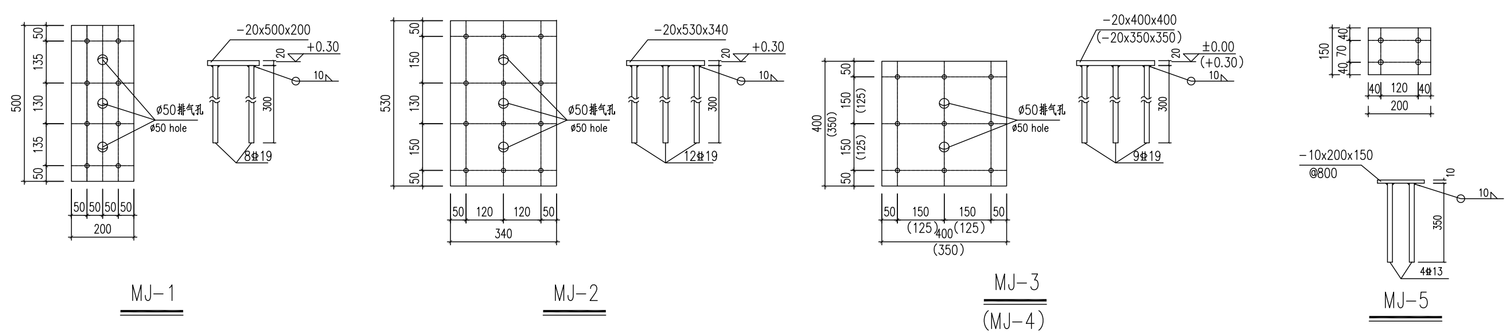

Reference Drawings

Drwg. No.	Title

Revisions

Name	Date	Notes

巴基斯坦默蒂亚里—拉合尔±660kV直流输电工程

±660kV HVDC Project from Matiari to Lahore in Pakistan

NATIONAL TRANSMISSION & DESPATCH COMPANY (NTDC) LIMITED PAKISTAN

CONTRACTOR 国家电网 STATE GRID 中国电力技术装备有限公司 CHINA ELECTRIC POWER EQUIPMENT AND TECHNOLOGY CO.,LTD.

SUBCONTRACTOR East China Electric Power Design Institute Co.,Ltd.

拉合尔±660kV换流站

±660kV Lahore Converter Station

设计阶段 PHASE | 施工图 Detail Design

M L H V D C - L C S - E C I - D D - C S - 0 4 0 2 - 0 0 2 B

	姓名 Name	日期 Date
设计 Designed		2019.11.25
校核 Checked		2019.11.25
审核 Reviewed		2019.11.25
批准 Approved		2019.11.25

专业 Speciality	会签 Sign	日期 Date
水工		2019.11.25
电气一次		2019.11.25

YY备用换流变基础图

layout of foundation for YY Spare Converter Transformer

比例 Scale 1:50 | 图号 DWG NO. 30-B003701S-T0402-002 | 版本 REV. B

594X841

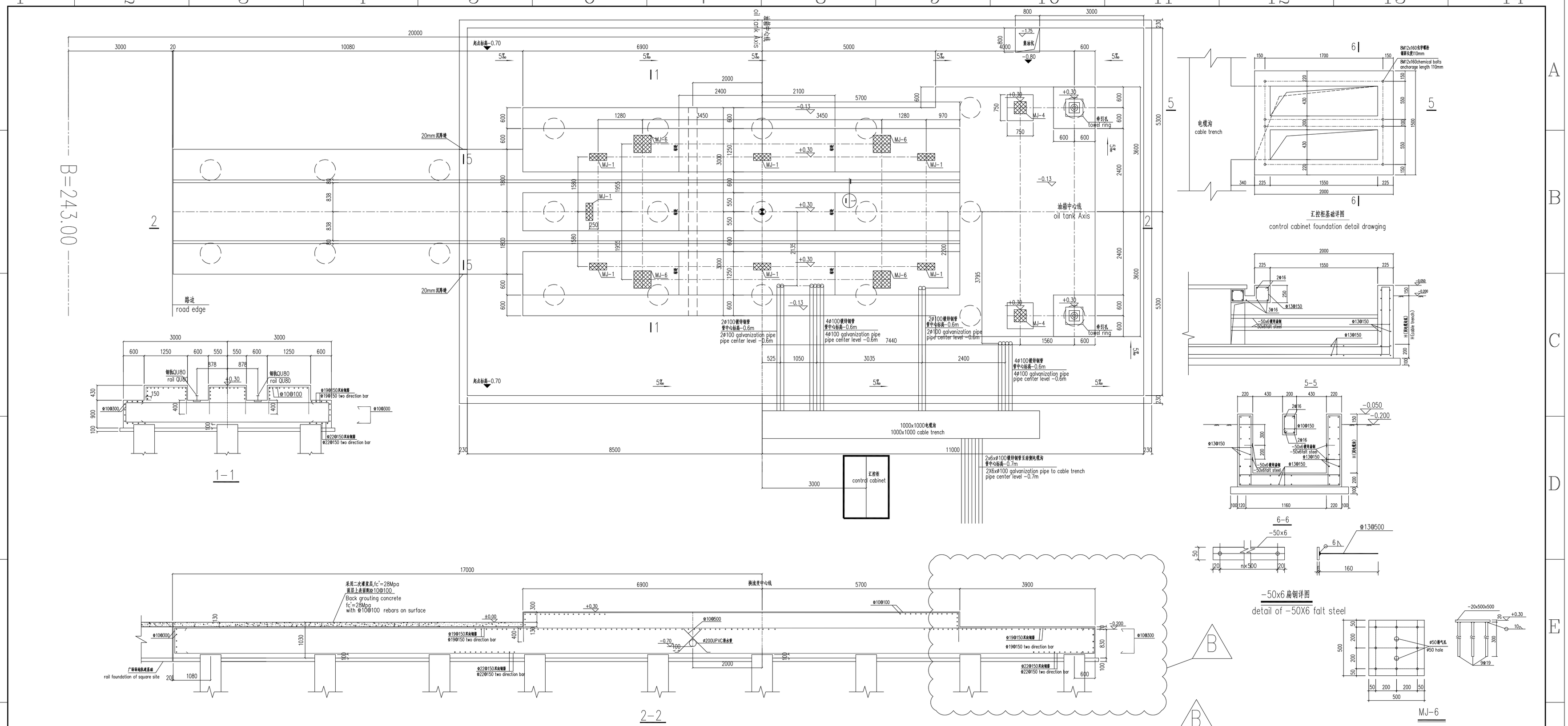

说明：

1、换流变广场场地±0.000相当于绝对标高193.60(EGM2008高程系统)。如无特别说明，本工程标高均采用相对标高。
2. 材料：1）混凝土强度等级：fc'=28Mpa,二次灌浆层强度等级：fc'=35Mpa,垫层强度等级：fc'=21Mpa;
   2）钢筋：φ-ASTM A615 Grade 60,Fu=420Mpa
3. 混凝土要求：
   1)水胶比不大于0.50；
   2)最大氯离子含量（水泥用量的百分比）：0.10；测试方法参《ASTM C 1218M》。
   3)水泥型号：采用抗碱酸盐的硅酸盐水泥，水泥型号需满足《ACI 318-14》表19.3.2.1
      对应于暴露等级S1的水泥种类要求（ASTM C150 或ASTM 595 或ASTM C1157
      对应的类别）；
   4)水泥中掺入矿物掺合料的掺量、使用方法和耐腐蚀性能按相应产品的使用
      说明并经验证后确定）。
4. 钢筋保护层厚度为75mm。承台底的保护层厚度为100mm。
5. 桩与承台的连接构造参见图集（10SG813）34页 桩顶与承台连接构造，桩内主筋伸入承台长度为35d。
6. 换流变基础的平整水平偏差不得超过2mm。
7. 大体积混凝土浇法同坦斯瑞地轨道基础做法。
8. 镀锌钢管至邻近电缆沟，换流变基础侧管口与基础平齐。埋管弯曲半径不小于1.2m。
9. 基础露出地面的部分采用清水混凝土，四周需做倒角，倒角尺寸为25mm。
10.轨道QU80在沉降缝处均连续。
11. 所有外露铁件均须热镀锌防腐，预埋件下混凝土应浇捣密实，所有埋件采用Q235B,焊条采用E43XX型。
   所有埋件采用Q235B,焊条采用E43XX型。
12. 直锚筋与锚板采用T形焊，当直径不大于20mm时，采用压力埋弧焊；当大于20mm时，采用穿孔塞焊。
13. 现场焊接处刷环氧富锌漆防腐。
14. 除埋件MJ-5外，其他埋件周围留置10mm宽的变形缝，深度与埋件厚度一致，并采用硅酮耐候胶封闭，
   防止设备安装焊接过程中，因埋件变形引起的混凝土面层裂缝。

Specification :

1. The Converter Transformer square site level of ±0.000 is equal to the absolute elevation of193.60 (geodestic datum system EGM2008) If not specified,the elevations of the project
2.MATERIALS:
   1) CONCRETE:
   FOR FOUNDATIONS : SPECIFIED COMPRESSIVE CONCRETE STRENGTH f'c=28Mpa
   FOR GROUTING: SPECIFIED COMPRESSIVE CONCRETE STRENGTH f'c=35Mpa
   FOR concrete cushion: SPECIFIED COMPRESSIVE CONCRETE STRENGTH f'c=21Mpa
   2) STEEL REINFORCING :
   φ: ASTM A615 GRADE60 , MINIMUM YIELD STRENTH Fy=420Mpa
3.MATERIALS:
   1) CONCRETE:
   FOR FOUNDATIONS : SPECIFIED COMPRESSIVE CONCRETE STRENGTH f'c=28Mpa
   FOR GROUTING: SPECIFIED COMPRESSIVE CONCRETE STRENGTH f'c=35Mpa
   FOR concrete cushion: SPECIFIED COMPRESSIVE CONCRETE STRENGTH f'c=21Mpa
   2) STEEL REINFORCING :
   φ: ASTM A615 GRADE60 , MINIMUM YIELD STRENTH Fy=420Mpa
   3) ANCHOR BOLTS,NUTS AND WASHERS, anchor plate,Locating plate :
   Q345B, MINIMUM YIELD STRENTH Fy=345Mpa .
   MINIMUM TENSILE STRENTH Fu=470Mpa .
   THE ANCHOR BOLTS, NUTS , WASHERS, anchor plate MUST BE HOT DIP GALVANIZED.
4. The minimum concrete cover is 75mm,The minimum concrete cover of foundation bottom is 100mm.
5. The connection structure between the pile and the cap refers to the 34 page of atlas (10SG813).The main reinforcement extends into the pile cap with a length of 35d.
6.The converter transformer foundation top should be flat. And the level difference of top surface should be within 2mm.
7.The construction measures of mass concrete can be refer to rail foundation.
8.Cable should be connected to the trench nearby by steel pipes which are hot- galvanized.
   The ending level of steel pipe beside the converter transformer foundation should be the same as it.
   The radius of embedded steel pipes should no less than 1.2m.
9.The part of foundation which is exposed should use fair faced concrete technology with chamfer at edge. The radius of chamfer is 25mm.
10.The rail track (QU80) should be continuous at settlement joint.
11.All the exposed steel members should be hot-galvanized. The concrete beneath the embedded membert should be well compacted.
   All the embedded members using Q235B steel. The weld rod using E43XX type.
12.Rebars connect to the anchor plate by T type welding. Using pressure submerged arc welding for case of rebar radius less than 20mm and plug welding for other cases.
13.The steel member welded in site should be paint epoxy zinc rich lacquer coating for anti-corrosion.
14.All the embedded members except MJ-5 should be cut 10mm wide construction joint around. The depth of construction joint is the same as anchor plate, and finished by neutral silicone weather sealant.
15.Because of oil chromatography line monitoring cabinet are not confirmed, please contact the ECEPDI before the construction work started.

Reference Drawings

Drwg. No.	Title

Revisions

	Name	Date	Notes

巴基斯坦默蒂亚里—拉合尔±660kV直流输电工程
±660kV HVDC Project from Matiari to Lahore in Pakistan

NATIONAL TRANSMISSION & DESPATCH COMPANY (NTDC) LIMITED PAKISTAN

CONTRACTOR 国家电网 STATE GRID 中国电力技术装备有限公司 CHINA ELECTRIC POWER TECHNOLOGY AND EQUIPMENT CO.,LTD.

SUBCONTRACTOR East China Electric Power Design Institute Co.,Ltd.

拉合尔±660kV换流站
±660kV Lahore Converter Station

设计阶段 PHASE: 施工图 Detail Design

M L H V D C - L C S - E C I - D D - C S - 0 4 0 2 - 0 0 3 B

		姓名 Name	日期 Date
水工			2019.11.25
电气一次			2019.11.25
专业 Speciality		会签 Sign	日期 Date
设计 Designed			2019.11.25
校核 Checked			2019.11.25
审核 Reviewed			2019.11.25
批准 Approved			2019.11.25
比例 Scale	1:50 A	图号 DWG NO.	30-B003701S-T0402-003

YD备用换流变基础图

layout of foundation for YD Spare Converter Transformer

版本 REV. B

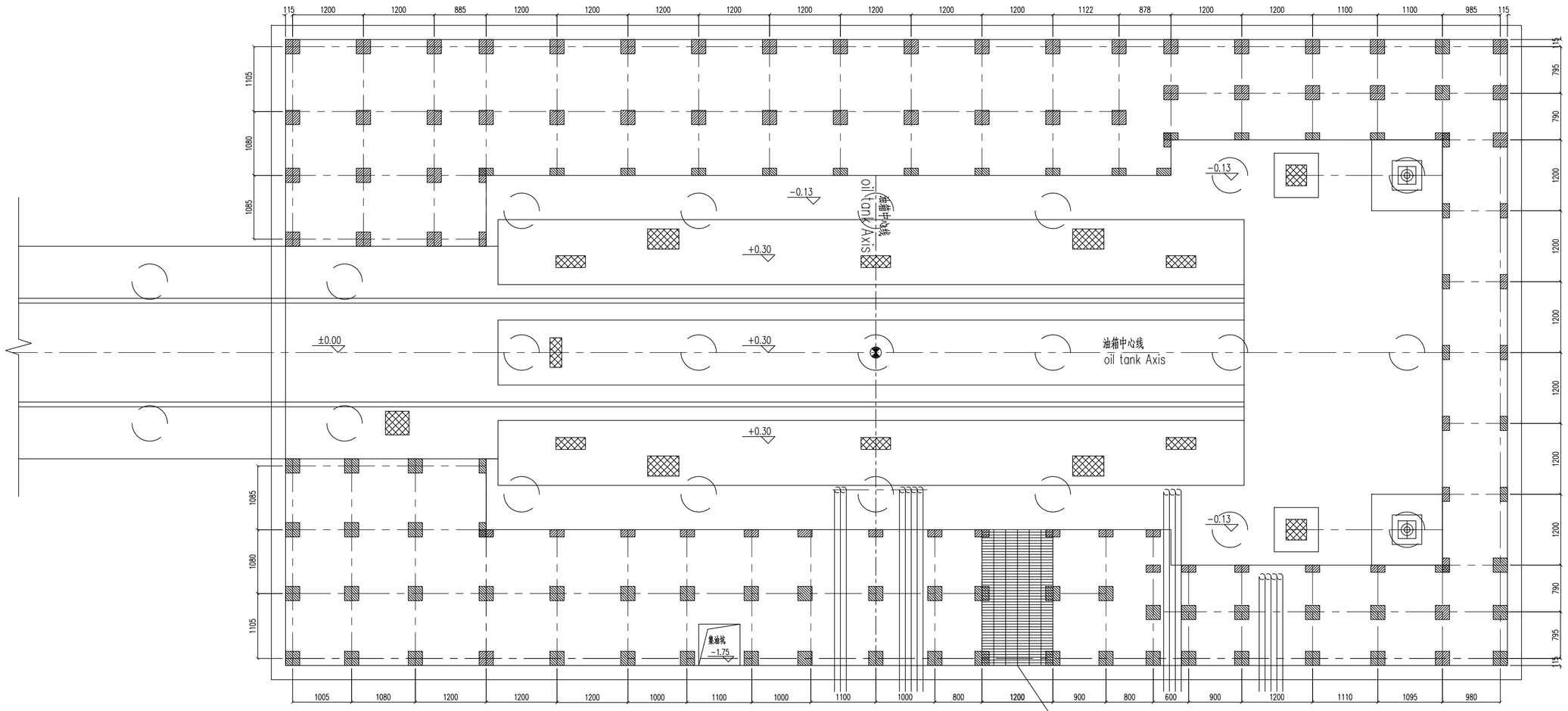

YY备用换流变支墩图

layout of abanurus for YY Spare Converter Transformer

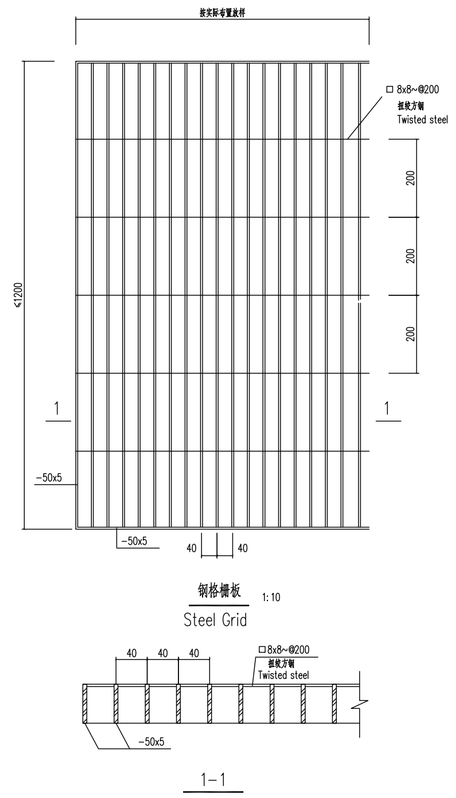

说明：

1. 换流变广场砼地±0.000相当于绝对标高193.60(EGM2008高程系统)，如无特别说明，本工程标高均采用相对标高。
2. 油坑230*230mm混凝土墩采用砖墩，墩顶标高为-0.20。
3. 砌体墙体材料的选用见下表：（砌筑砂浆需采用商品砂浆）

部位	厚度(mm)	采用材料	块体强度等级	砂浆强度等级 M类水泥砂浆	最大容重(kN/m³)
0.000以下	230	机制粘土烧结砖	f'm=23Mpa(3350psi)	f'g=12.4Mpa(1800psi)	16.4

4. 钢材材质为Q235B.所有外露铁件均须热镀锌防腐。

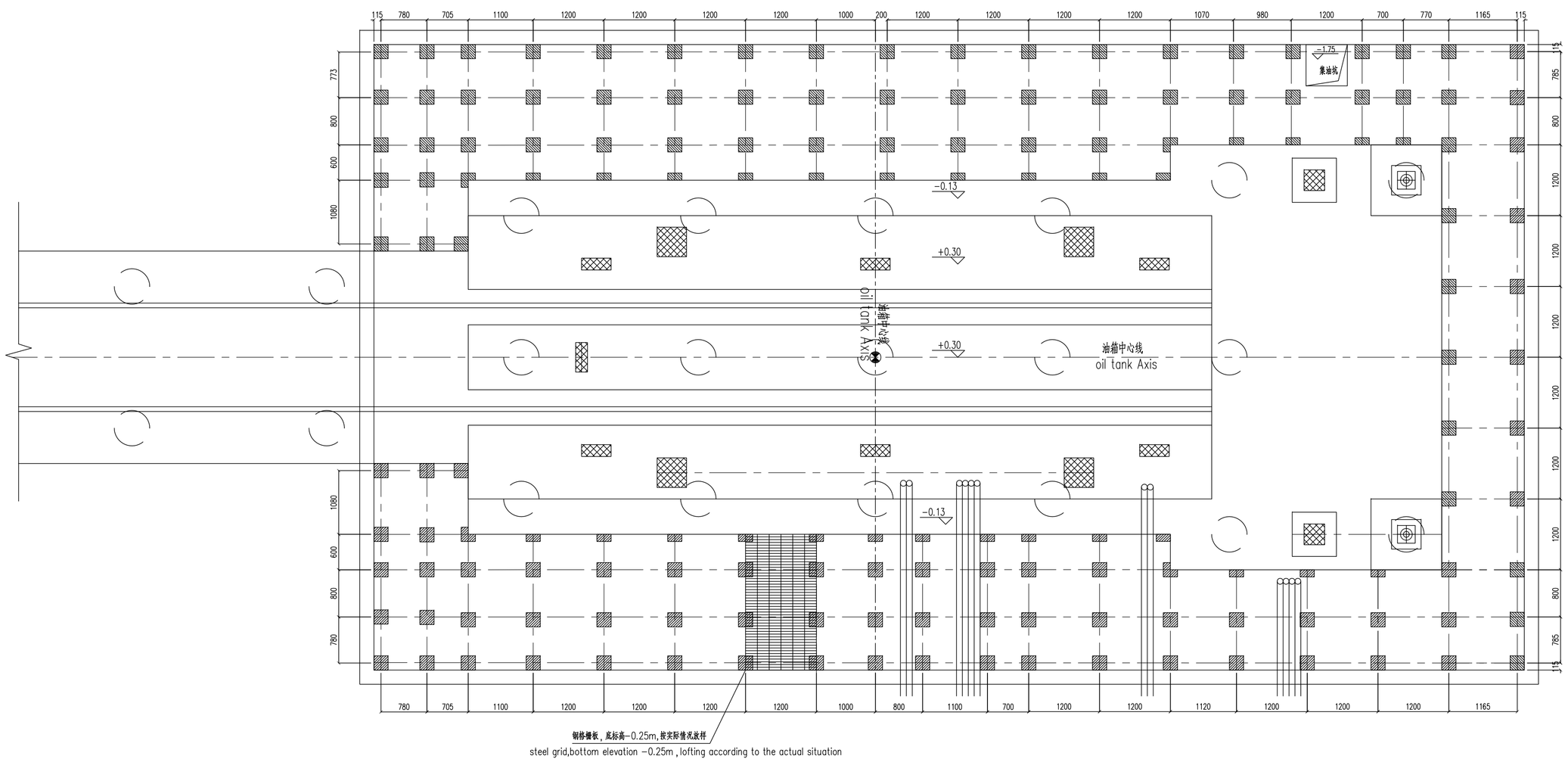

YD备用换流变支墩图

layout of abanurus for YD Spare Converter Transformer

Specification :

1. The Converter Transformer square site level of ±0.000 is equal to the absolute elevation of193.60 (geodestic datum system EGM2008) If not specified,the elevations of the project
2. The oil pit 230*230mm concrete pier adopts brick pier, and the height of the pier top is -0.20.
3. The selections of wall materials are shown in the following table: (masonry mortar should be made of commercial mortar)

Members	Thickness(mm)	Materials	Strength Grade of Masonry Units
Below 0.000	230	Sintered Clay Brick	f'm=23Mpa(3350psi)

Members	Strength Grade of Mortar	Maximum Unit Weight(kN/m³)
Below 0.000	f'g=12.4Mpa(1800psi)	16.4

4. Steel material is Q235B.All the exposed steel members should be hot-galvanized.

Reference Drawings

Drwg. No.	Title

Revisions

	Name	Date	Notes

巴基斯坦默蒂亚里—拉合尔±660kV直流输电工程

±660kV HVDC Project from Matiari to Lahore in Pakistan

NATIONAL TRANSMISSION & DESPATCH COMPANY (NTDC) LIMITED PAKISTAN

CONTRACTOR 国家电网 STATE GRID 中国电力技术装备有限公司 CHINA ELECTRIC POWER EQUIPMENT AND TECHNOLOGY CO.,LTD.

SUBCONTRACTOR East China Electric Power Design Institute Co.,Ltd.

拉合尔±660kV换流站

±660kV Lahore Converter Station

设计阶段 PHASE: 施工图 Detail Design

M L H V D C - L C S - E C I - D D - C S - 0 4 0 2 - 0 0 4 A

	姓名 Name	日期 Date
设计 Designed	鲍伟	2019.11.25
校核 Checked	刘娟	2019.11.25
审核 Reviewed	苏清晴	2019.11.25
批准 Approved	杨浮	2019.11.25
比例 Scale	1:50	图号 DWG NO. 30-B003701S-T0402-004

备用换流变支墩图

layout of abanurus for Spare Converter Transformer

版本 REV. A

专业 Speciality	会签 Sign	日期 Date
电气一次	李雄	2019.11.25

594X841